HYPERLABS™
Innovation at Hyperspeed since 1992

# HL948x Series Resistive Power Splitter (DC to 67 GHz)

## Features and Technical Specifications[1] (HL9487 shown)

| | |
|---|---|
| Bandwidth (-1.5 dB) | DC to 67 GHz |
| Insertion Loss (AC) | 6 dB |
| Amplitude Match | ± 0.1 dB<br>See *Fig. 1* |
| Phase Match | ± 4°, f = 20 GHz<br>± 8°, f = 40 GHz<br>*See Fig. 3* |
| Return Loss<br>- Input port 1 | > 18 dB, f ≤ 50 GHz<br>*See Fig. 2* |
| Rise Time | 5 ps |
| Insertion (Group) Delay | 130 ps, all ports<br>See *Fig. 4* |
| Max Input Power | +27 dBm |
| Impedance | 50 Ω ± 5% |
| Connectors | 1.85 mm, 3x jack/female<br>1.85 mm plug connectors also available |
| Dimensions | 0.69" (17.6 mm), center to end of each connector<br>*See Fig. 5* |
| Temperature Limits | -40° to +70° C, operating |
| RoHS Compliant | Yes, assembled with lead-free solder |
| REACH Compliant | Yes |
| Warranty | 1 year, see website |

NOTE 1 - Unless otherwise noted, the specifications in this table are typical for Model Number HL9487 using the standard connector configuration (3 x jack). Full specifications for this and related models are available on Page 2 of this datasheet.




*HL9487, standard configuration shown*

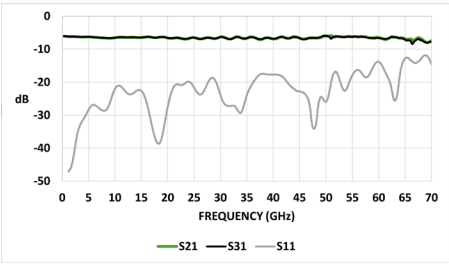


*Typical HL9487 Insertion and Return Loss*

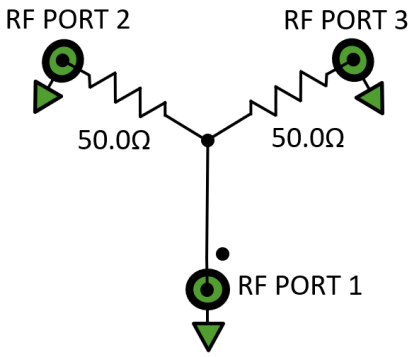


*HL948x Schematic and Port Assignments*

### PRODUCT SUMMARY

The HL948x series are ultra-broadband, symmetrical, two-resistor power splitters that provide outstanding amplitude and phase-symmetrical power division from DC to beyond 67 GHz. The splitters also provide exceptional band flatness and return loss across the frequency range.

These parts are suitable for making power ratio measurements as accuracy of the divided outputs is extremely well tracked. The precision of the divided outputs allows for measurements to be taken with a high level of ratio-metric certainty.

They are applicable for levelling applications in transmission measurements, or reflection measurements with the use of a bridge.

### DEPLOYMENT NOTES

If used in the reverse direction, the device can be used as a combiner..

### MODELS & OPTIONS

The following models are available:

- ***HL9482***, 26.5 GHz
- ***HL9484***, 40 GHz
- ***HL9485***, 50 GHz
- ***HL9487***, 67 GHz

The following connector options are available:

- ***-JJJ***, jack/jack/jack
- ***-JPP***, jack/plug/plug
- ***-PJJ***, plug/jack/jack
- ***-PPP*** plug/plug/plug

## HL948x Full Specifications

| Parameter | HL9482 | HL9484 | HL9485 | HL9487 | Comments |
|---|---|---|---|---|---|
| Upper Frequency Limit | 26.5 GHz | 40 GHz | 50 GHz | 67 GHz | 1.5 dB guaranteed, relative to nominal insertion loss |
| Lower Frequency Limit | DC | | | | |
| Insertion Loss (DC) | 6.02 ± 0.11 dB | | | | |
| Insertion Loss (AC)<br>*See Fig. 1* | 6 dB | | | | Typical, nominal |
| Return Loss<br>Input Port 1<br>*See Fig. 2* | > 20 dB | > 18 dB | > 18 dB | > 18 dB, f ≤ 50 GHz<br>> 12 dB, f > 50 GHz | Typical |
| Return Loss<br>Output ports 2 and 3<br>*See Fig. 2* | > 10 dB | > 10 dB | > 10 dB | > 10 dB | Typical |
| Amplitude Match<br>*See Fig. 1* | ± 0.1 dB | | | | Typical, between all ports |
| Phase Match<br>*See Fig. 3* | ± 4°, f = 20 GHz | ± 4°, f = 20 GHz<br>± 8, f = 40 GHz | ± 4°, f = 20 GHz<br>± 8, f = 40 GHz | ± 4°, f = 20 GHz<br>± 8, f = 40 GHz | Typical, between all ports |
| Rise Time | 17.5 ps | 8.75 ps | 7 ps | 5.2 ps | Typical |
| Insertion (Group) Delay<br>*See Fig. 4* | 130 ps | | | | Typical, all ports |
| Max Input Power | +27 dBm | | | | Subject to change |
| Impedance | 50 Ω ± 5% | | | | Only input port |
| Connectors | SMA, 3x jack/female | 2.92 mm, 3x jack/female | 2.4 mm, 3x jack/female | 1.85 mm, 3x jack/female | Plug/male connectors available |
| Length and Width | 0.69”<br>17.57 mm | | | | From center to reference plane of each connector |
| Height | 0.535”<br>13.59 mm | | | | |
| Weight | 14 g (0.49 oz.) | | | | |
| Operating Temperature | -40° to +70° C | | | | Case temperature |
| RoHS Compliant | Yes, assembled with lead-free solder | | | | |
| REACH Compliant | Yes | | | | |
| Warranty | 1 year, repair or replacement; see website for details | | | | |

Note: All specifications are based on test results using the standard connector configuration (3 x jack). Specifications may vary slightly for other configurations.

## HL948x Plot Diagrams

Figures 1-4 show the typical S-parameter characteristics and group delay of an HL9487. Other models show similar performance within their respective specified bandwidths. The HL9487 is matched to 50 Ω on all ports. Port 1 is specified with a dot on the label, and Ports 2 and 3 are matched.

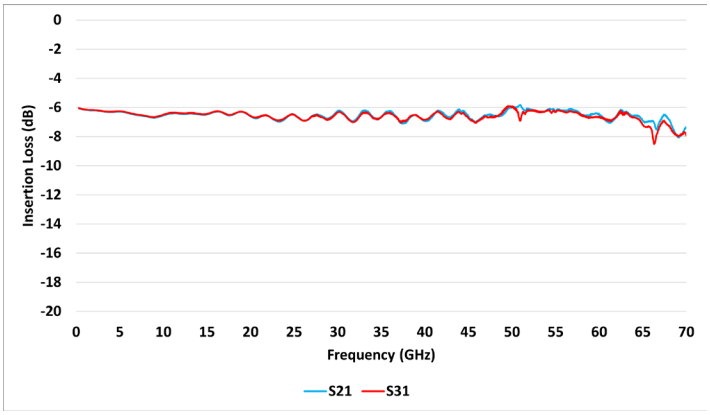


*Figure 1: Typical HL9487 Bandwidth and Amplitude Match*

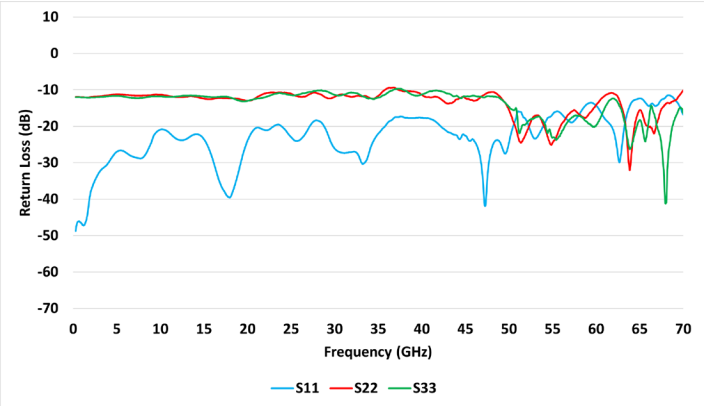


*Figure 2: Typical HL9487 Return Loss*

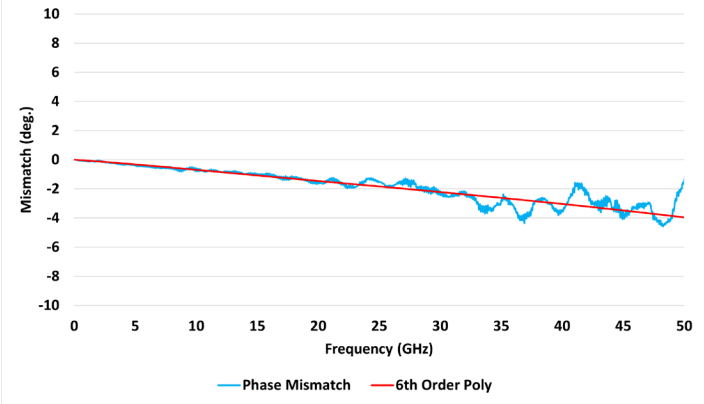


*Figure 3: Typical HL9487 Phase Mismatch*

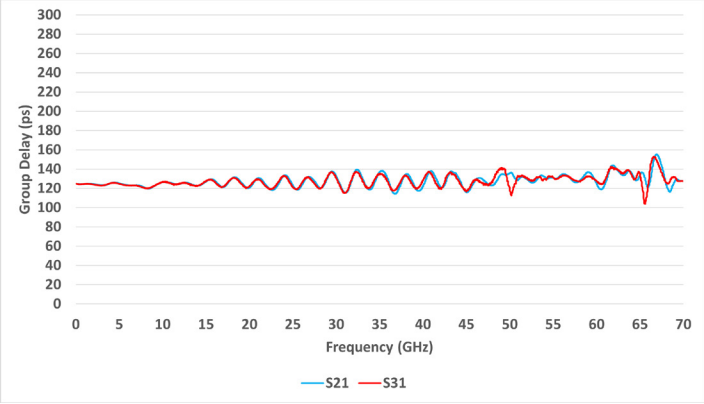


*Figure 4: Typical HL9487 Group Delay*

## HL948x Dimensional Drawing

*Figure 5* shows a mechanical drawing of an HL9487. Unless otherwise noted, all units are shown in inches. Other models vary in length and width based on connectors.

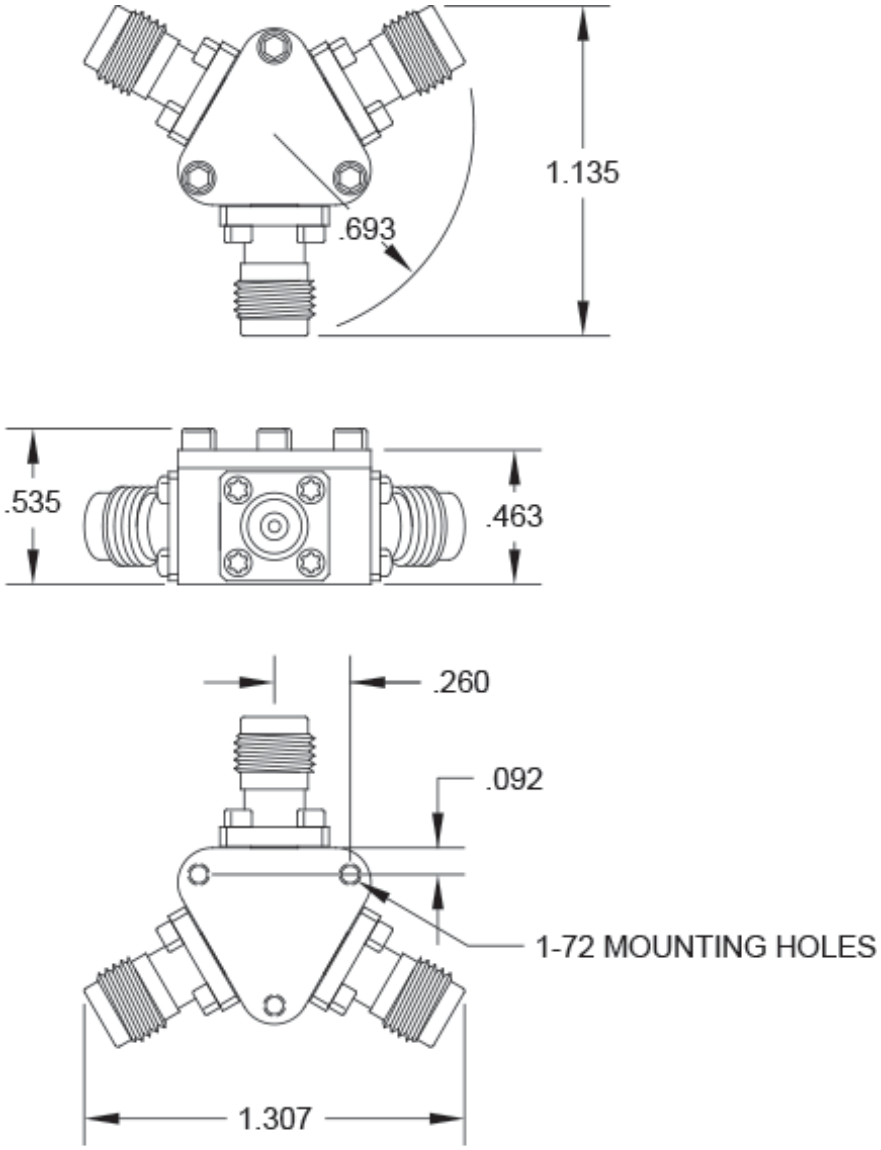


*Figure 5: HL9487 Mechanical Drawing*