HYPERLABS™
Innovation at Hyperspeed since 1992

HL957x Series 4-Way Power Dividers (DC to 67 GHz)

Features and Technical Specifications[1] (HL9577 shown)

PRODUCT SUMMARY

The HL957x series are ultra-broadband 12 dB 4-way power dividers that provide outstanding amplitude- and phase-symmetrical power division from DC to beyond 65 GHz.

This product is designed using multiple three-resistor networks resulting in outputs that are nominally attenuated to 12 dB, and all ports are impedance-matched to 50 Ohms when all ports are terminated.

They are suitable for use as a clock splitter and in 112 Gbps PAM4 communications systems, high-speed analog-to-digital conversion, frequency response testing for differential devices, and many other applications.

When used alongside Hyperlabs ultra-broadband baluns, thees devices can be used to drive multiple differential high-speed analog-to-digital convertors..

DEPLOYMENT NOTES

The ports of the HL957x series are symmetrical and the device can be used in any direction.

MODELS & OPTIONS

The following models are available:

- ***HL9572***, 26.5 GHz
- ***HL9574***, 40 GHz
- ***HL9455***, 50 GHz
- ***HL9577***, 67 GHz

The following connector options are available:

- ***-JJJJJ,*** 5 x jack
- ***-PJJJJ***, plug/4 x jack
- ***-JPPPP***, jack/4 x plug

Bandwidth	DC to 67 GHz
Insertion Loss	12 dB
Amplitude Match	± 0.5 dB See *Fig. 1*
Phase Match	± 4°, f = 20 GHz ± 8°, f = 40 GHz *See Fig. 4*
Return Loss	> 15 dB, f ≤ 45 GHz > 10 dB, f > 45 GHz *See Fig. 2*
Rise Time	5 ps
Insertion (Group) Delay	198 ps, all ports See *Fig. 3*
Max Input Power	+33 dBm
Impedance	50 Ω ± 5%
Connectors	1.85 mm, 5x jack/female
Dimensions (L x W x H)	1.575” x 1.79” x 0.40” 40 x 45.5 x 10.16 mm *See Fig. 9*
Temperature Limits	-40° to +70° C, operating
RoHS Compliant	Yes, assembled with lead-free solder
REACH Compliant	Yes
Warranty	1 year, see website

NOTE 1 - Unless otherwise noted, the specifications in this table are typical for Model Number HL9577 using the standard connector configuration (-JJJJJ, 5 x jack). Full specifications for this and related models are available on page 2 of this datasheet.



HL9577, standard configuration shown

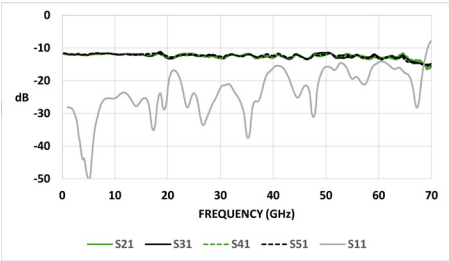

Typical HL9577 Insertion and Return Loss

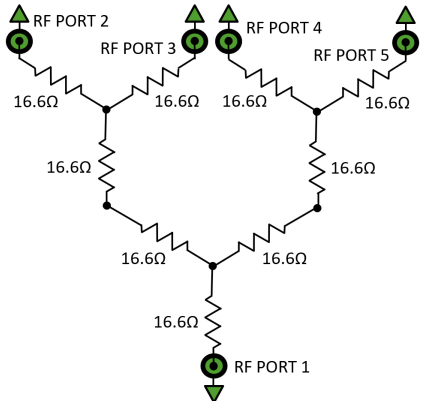

HL957x Schematic and Port Assignments

HL957x Full Specifications

Parameter	HL9572	HL9574	HL9575	HL9577	Comments
Upper Frequency Limit	26.5 GHz	40 GHz	50 GHz	67 GHz, typical 64 GHz, minimum	3 dB guaranteed, relative to nominal insertion loss
Lower Frequency Limit	DC				
Insertion Loss (DC)	12 dB				
Insertion Loss (AC) *See Fig. 1*	12 ± 0.5 dB ripple				Typical, nominal
Return Loss *See Fig. 2*	> 24 dB, f = 20 GHz	> 20 dB, f ≤ 30 GHz	> 20 dB, f ≤ 30 GHz > 15 dB, f > 30 GHz	> 15 dB, f ≤ 45 GHz > 10 dB, f > 45 GHz	Typical
Amplitude Match *See Fig. 1*	± 0.5 dB				Typical, between all ports
Phase Match *See Fig. 4*	± 4°, f = 20 GHz	± 4°, f = 20 GHz ± 8, f = 40 GHz	± 4°, f = 20 GHz ± 8, f = 40 GHz	± 4°, f = 20 GHz ± 8, f = 40 GHz	Typical, between all ports
Rise Time	17.5 ps	8.75 ps	7 ps	5.2 ps	Typical
Insertion (Group) Delay *See Fig. 3*	198 ps				Typical, all ports
Max Input Power	+33 dBm				
Impedance	50 Ω ± 5%				All ports
Connectors	SMA, 5 x jack/female	2.92 mm, 5 x jack/female	2.4 mm, 5 x jack/female	1.85 mm, 5 x jack/female	Plug/male connectors available
Length and Width	1.575” x 1.79” 40 x 45.5 mm				
Height	0.40” 10.16 mm				
Weight	14 g (0.49 oz.)				
Operating Temperature	-40° to +70° C				Case temperature
RoHS Compliant	Yes, assembled with lead-free solder				
REACH Compliant	Yes				
Warranty	1 year, repair or replacement; see website for details				

NOTE - All specifications are based on test results using the standard connector configuration (5 x jack). Specifications may vary slightly for other configurations.

HL9479 Plot Diagrams

Figures 1-4 show the typical S-parameter characteristics and group delay of an HL9577. The HL9577 is matched to 50 Ω on all ports. Port 1 is specified with a dot on the label, and Ports 2 through 5 are matched.

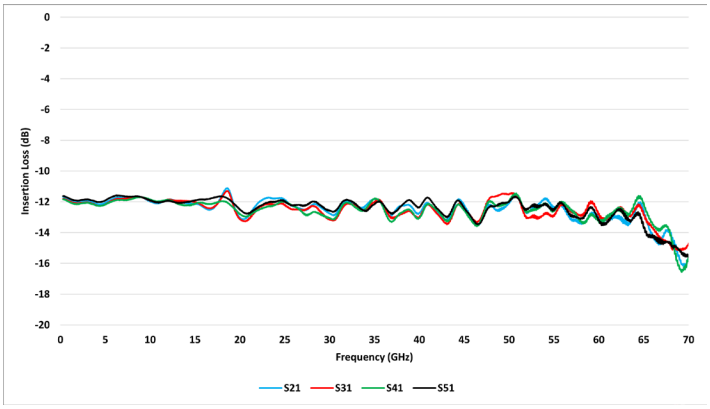

Figure 1: Typical HL9577 Bandwidth and Amplitude Match

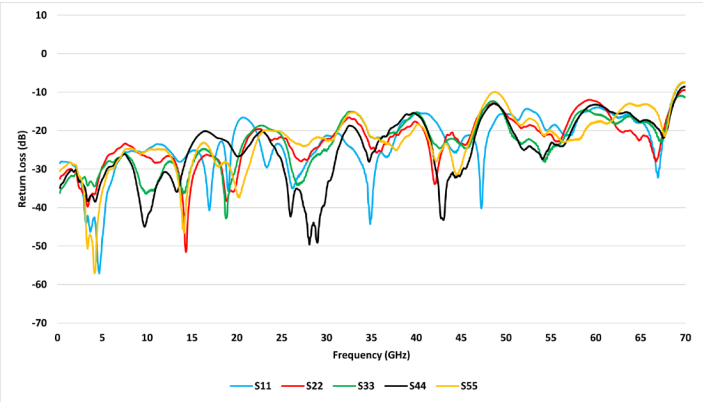

Figure 2: Typical HL9577 Return Loss

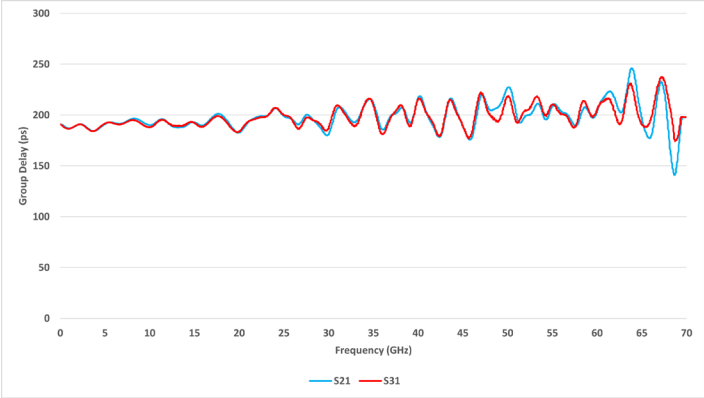

Figure 3: Typical HL9577 Group Delay

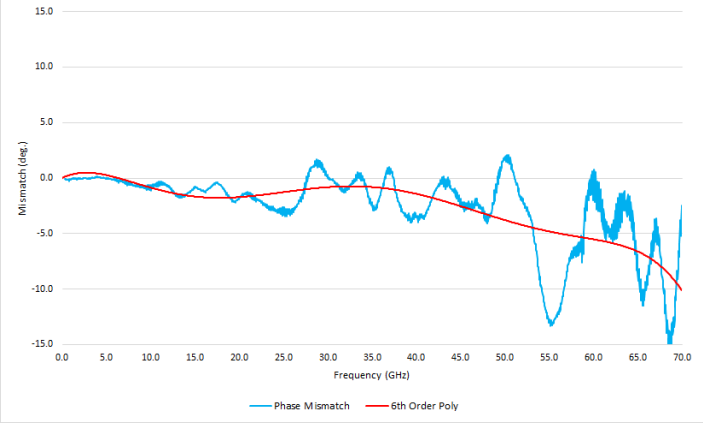

Figure 4: Typical HL9577 Phase Mismatch

HL957x Dimensional Drawing

Figure 9 shows a mechanical drawing of an HL9577. Unless otherwise noted, all units are shown in inches. Other models vary in length and width based on connectors.

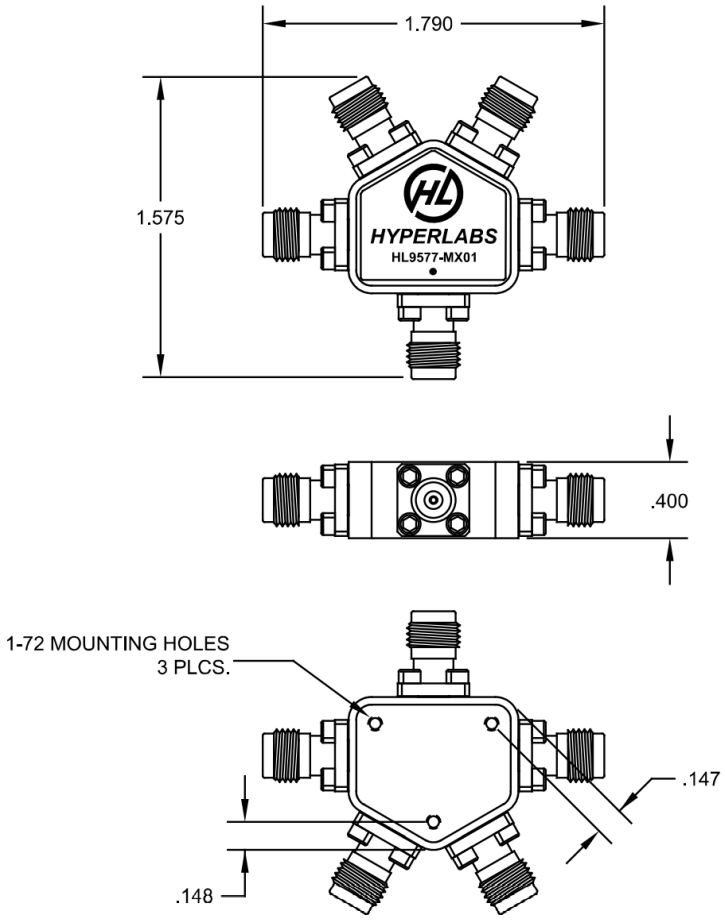

Figure 9: HL9577 Mechanical Drawing