HL947x Series Resistive Power Divider (DC to 67 GHz)

Features and Technical Specifications[1] (HL9477 shown)

PRODUCT SUMMARY

The HL947x series are ultra-broadband, power dividers that provide outstanding amplitude and phase-symmetrical power division from DC to beyond 67 GHz.

This product is designed using a three-resistor network resulting in outputs that are nominally attenuated to 6 dB, and all ports are impedance-matched to 50 Ohms when the ports are terminated.

They are applicable for levelling applications in transmission measurements, or reflection measurements with the use of a bridge.

DEPLOYMENT NOTES

The ports of the HL947x series are symmetrical and the device can be used in any direction.

MODELS & OPTIONS

The following models are available:

- ***HL9472***, 26.5 GHz
- ***HL9474***, 40 GHz
- ***HL9475***, 50 GHz
- ***HL9477***, 67 GHz

The following connector options are available:

- ***-JJJ***, jack/jack/jack
- ***-JPP***, jack/plug/plug
- ***-PJJ***, plug/jack/jack
- ***-PPP,*** plug/plug/plug

Bandwidth (-1.5 dB)	DC to 67 GHz
Insertion Loss (AC)	6 dB
Amplitude Match	± 0.1 dB See *Fig. 1*
Phase Match	± 4°, f = 20 GHz ± 8°, f = 40 GHz *See Fig. 3*
Return Loss	> 15 dB, f ≤ 45 GHz > 10 dB, f > 45 GHz *See Fig. 2*
Rise Time	5 ps
Insertion (Group) Delay	125 ps, all ports See *Fig. 4*
Max Input Power	+33 dBm
Impedance	50 Ω ± 5%
Connectors	1.85 mm, 3x jack/female 1.85 mm plug connectors also available
Dimensions	0.69” (17.6 mm), center to end of each connector *See Fig. 5*
Temperature Limits	-40° to +70° C, operating
RoHS Compliant	Yes, assembled with lead-free solder
REACH Compliant	Yes
Warranty	1 year, see website

NOTE 1 - Unless otherwise noted, the specifications in this table are typical for Model Number HL9477 using the standard connector configuration (3 x jack). Full specifications for this and related models are available on Page 2 of this datasheet.



HL9477, standard configuration shown

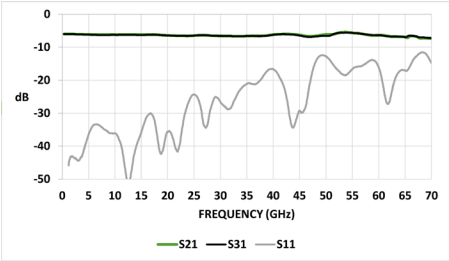

Typical HL9477 Insertion and Return Loss

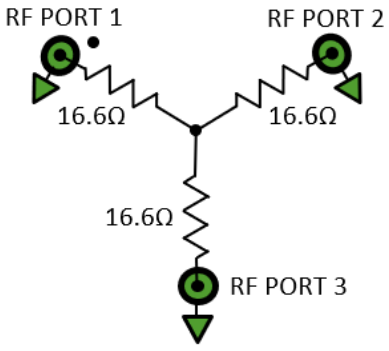

HL947x Schematic and Port Assignments

HL947x Full Specifications

Parameter	HL9472	HL9474	HL9475	HL9477	Comments
Upper Frequency Limit	26.5 GHz	40 GHz	50 GHz	67 GHz	1.5 dB guaranteed, relative to nominal insertion loss
Lower Frequency Limit	DC				
Insertion Loss (DC)	6.02 ± 0.11 dB				
Insertion Loss (AC) *See Fig. 1*	6 dB				Typical, nominal
Return Loss *See Fig. 2*	> 24 dB, f ≤ 20 GHz	> 20 dB, f ≤ 30 GHz	> 20 dB, f ≤ 30 GHz > 15 dB, f > 30 GHz	> 15 dB, f ≤ 45 GHz > 10 dB, f > 45 GHz	Typical
Amplitude Match *See Fig. 1*	± 0.1 dB				Typical, between all ports
Phase Match *See Fig. 3*	± 4°, f = 20 GHz	± 4°, f = 20 GHz ± 8, f = 40 GHz	± 4°, f = 20 GHz ± 8, f = 40 GHz	± 4°, f = 20 GHz ± 8, f = 40 GHz	Typical, between all ports
Rise Time	17.5 ps	8.75 ps	7 ps	5.2 ps	Typical
Insertion (Group) Delay *See Fig. 4*	125 ps				Typical, all ports
Max Input Power	+33 dBm				Subject to change
Impedance	50 Ω ± 5%				Only input port
Connectors	SMA, 3 x jack/female	2.92 mm, 3 x jack/female	2.4 mm, 3 x jack/female	1.85 mm, 3 x jack/female	Plug/male connectors available
Length and Width	0.69” 17.57 mm				From center to reference plane of each connector
Height	0.535” 13.59 mm				
Weight	14 g (0.49 oz.)				
Operating Temperature	-40° to +70° C				Case temperature
RoHS Compliant	Yes, assembled with lead-free solder				
REACH Compliant	Yes				
Warranty	1 year, repair or replacement; see website for details				

Note: All specifications are based on test results using the standard connector configuration (3 x jack). Specifications may vary slightly for other configurations.

HL947x Plot Diagrams

Figures 1-4 show the typical S-parameter characteristics and group delay of an HL9477. The HL9477 is matched to 50 Ω on all ports. Port 1 is specified with a dot on the label, and Ports 2 and 3 are matched. Other models show similar performance within their respective specified bandwidths.

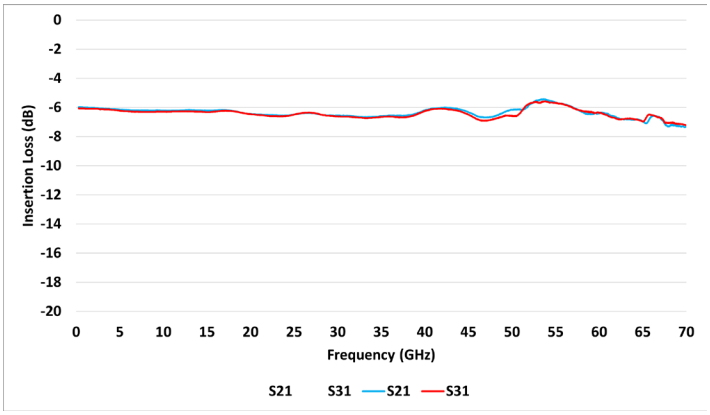

Figure 1: Typical HL9477 Bandwidth and Amplitude Match

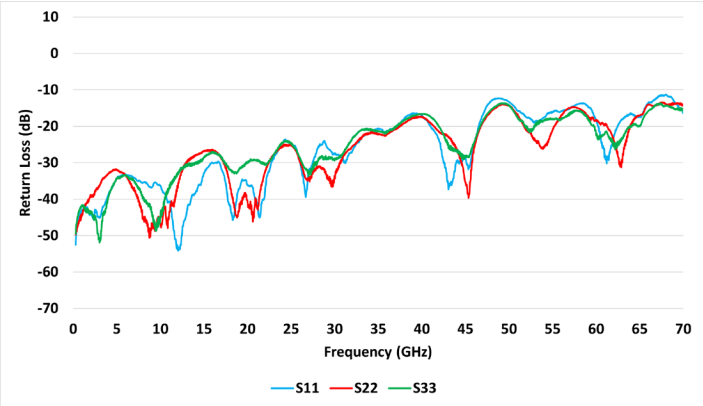

Figure 2: Typical HL9477 Return Loss

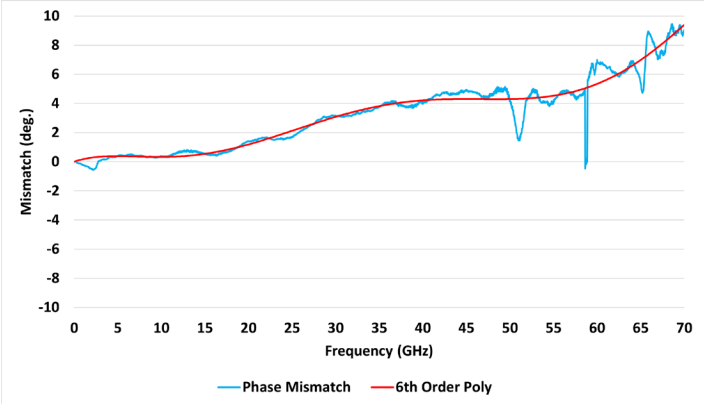

Figure 3: Typical HL9477 Phase Mismatch

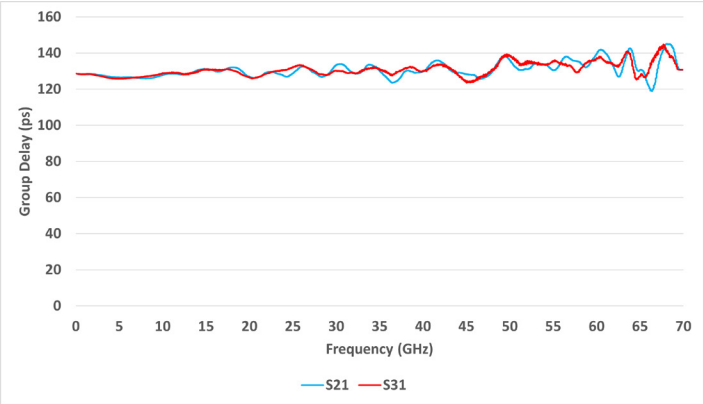

Figure 4: Typical HL9477 Group Delay

HL947x Eye Diagrams

Figures 5-6 show the eye diagrams of a 56 Gbps PRBS 11 pattern passed through an HL9477. Figures 7-8 show the eye diagrams of a 112 Gbps PAM4 signal.

All plots are shown at 100 mV/div.

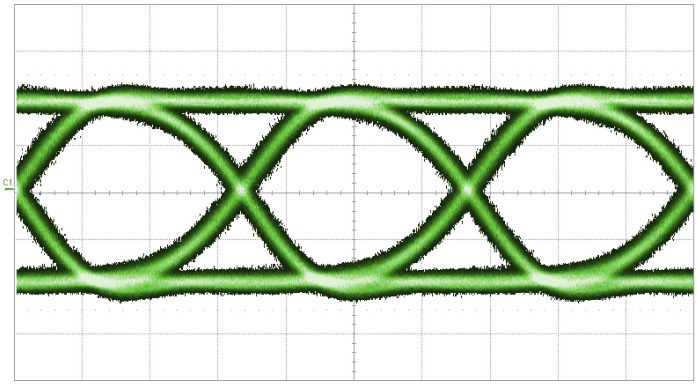

Figure 5: HL9477 56 Gpbs PRBS 11, RF Input

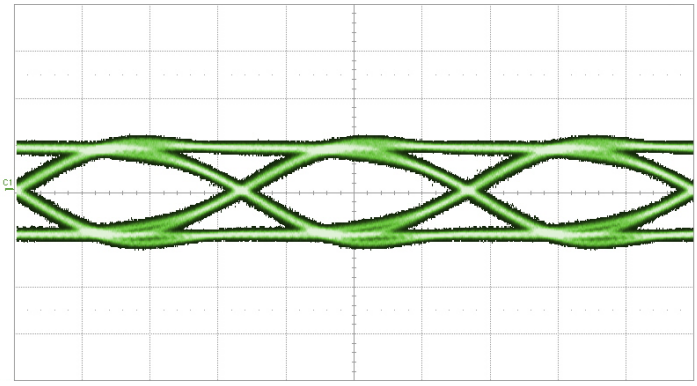

Figure 6: HL9477 56 Gpbs PRBS 11, RF Output

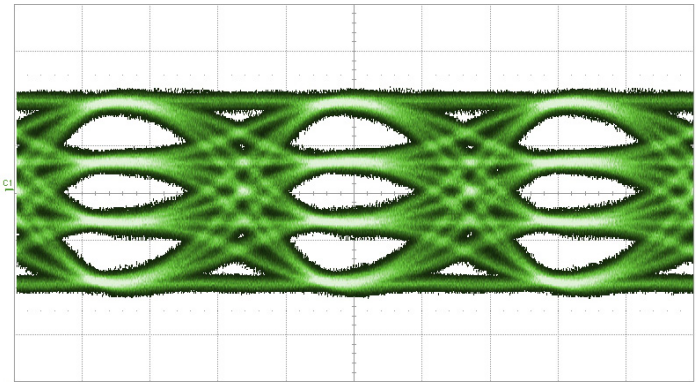

Figure 7: HL9477 112 Gbps PAM4, RF Input

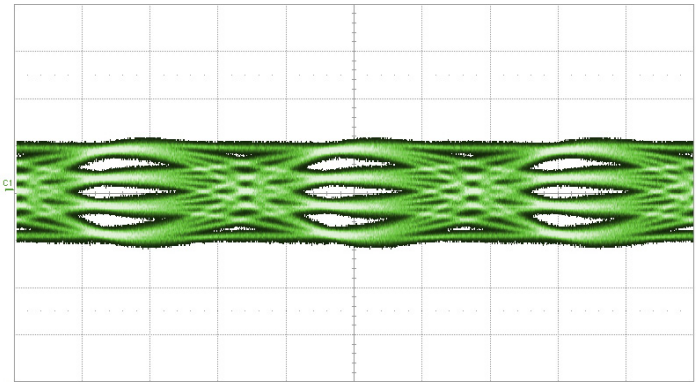

Figure 8: HL9477 112 Gbps PAM4, RF Output

HL947x Dimensional Drawing

Figure 9 shows a mechanical drawing of an HL9477. Unless otherwise noted, all units are shown in inches. Other models vary in length and width based on connectors.

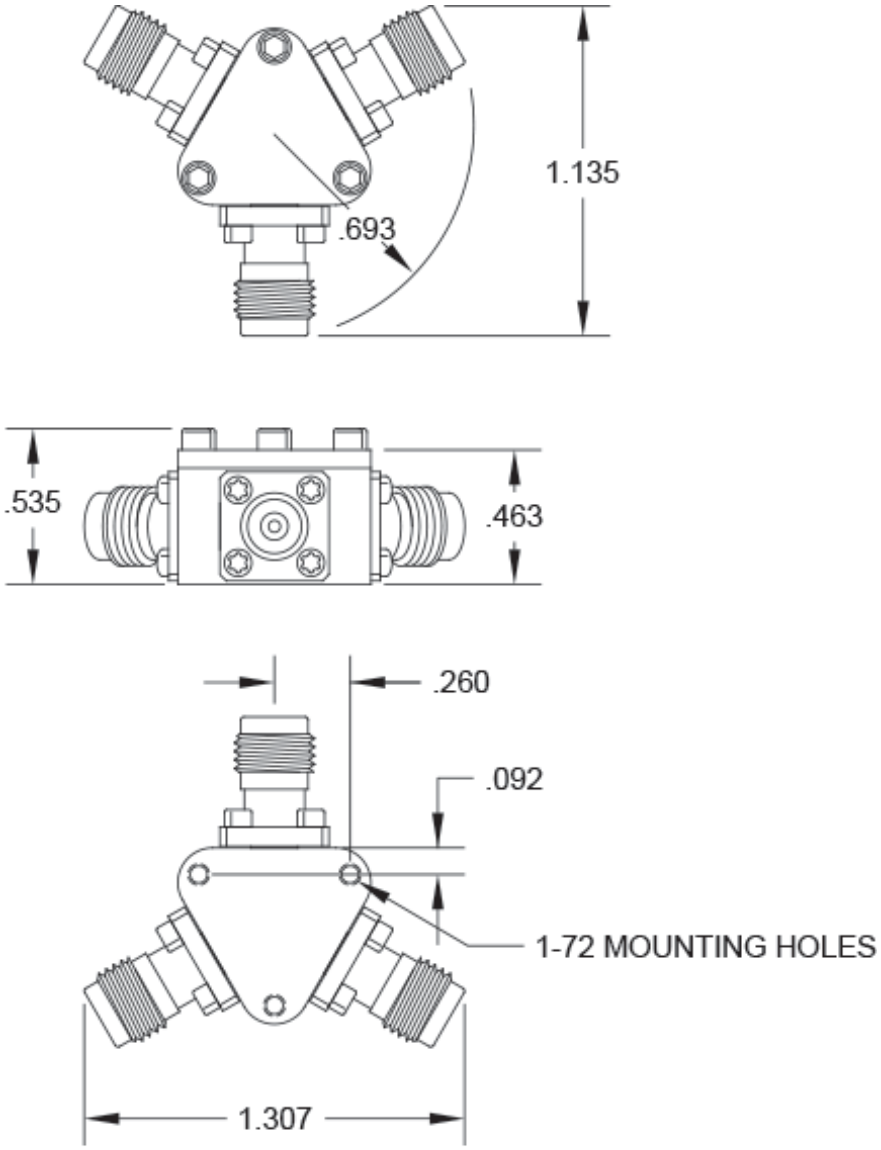

Figure 9: HL9477 Mechanical Drawing