HYPERLABS™
Innovation at Hyperspeed since 1992

HL9448/9 Series Bias Tees (160 kHz to 110 GHz, 175 mA)

Features and Technical Specifications[1] (HL9449 shown)

PRODUCT SUMMARY

The HL9448 and HL9449 are utra-broadband bias tees with a typical insertion loss of 2.5 dB throughout the specified bandwidth range.

The HL9448/9 blocks any existing DC signal and allows for the insertion of a DC bias current into a circuit with minimal perturbation of the impedance of a 50 ohm transmission line.

These devices can be used for biasing amplifiers, lasers, optical modulators, and other devices.

Applications include 224 Gbps PAM4 communications systems, optical communication systems, high-speed data systems, level shifting, cascading, and interfacing between devices with incompatible DC operating points.

MODELS & OPTIONS

The following models are available:

HL9448, 95 GHz
HL9449, 110 GHz

The following options are available:

-M, matched pair
-U, unmatched part(s)

-11, 11 V breakdown
-30, 30 V breakdown

CONNECTORS

Connectors should be specified according to the configurations listed on Page 2

Bandwidth	160 kHz to > 110 GHz (opt. -11) 200 kHz to > 110 GHz (opt. -30)
Amplitude Match (opt. -M only)	± 0.1 dB, f ≤ 110 GHz, all options See *Fig. 1*
Phase Match (opt. -M only)	± 4°, f = 40 GHz
Insertion Loss	< 2.5 dB, 160 kHz to 110 GHz, (opt. -JJ) See *Fig. 1*
Return Loss	15 dB, f ≤ 50 GHz, all options 10 dB, 50 GHz < f ≤ 110 GHz, all options See *Fig. 3*
Breakdown Voltage	11 V, max (opt. -11) 30 V, max (opt. -30)
Maximum Current	175 mA
Rise Time (10-90%)	3.2 ps, all options
Isolation *DC bias port to RF ports*	> 30 dB
Impedance	50 Ω
Dimensions (W x D x H)	1.95" x 1.30" x 0.53" 49.53 x 33.02 x 13.46 mm
Weight	24 g (0.85 oz.)
Connectors (AC / AC+DC)	1.0 mm Standard configuration is jack/plug with either pins or SMA jack for DC bias. See page 2 for other configurations
Temperature Limits	-40° to +70° C, operating
RoHS Compliant	Yes, assembled with lead-free solder
REACH Compliant	Yes
Warranty	1 year, see website

NOTE 1 - The specifications in this table are typical for Model Number HL9449 using the standard configuration (-JP, jack/plug).

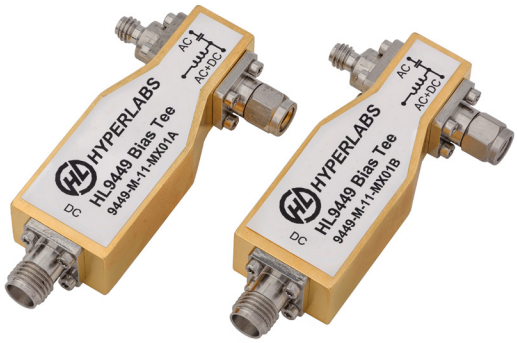

HL9449, Option -M-U-JPS shown

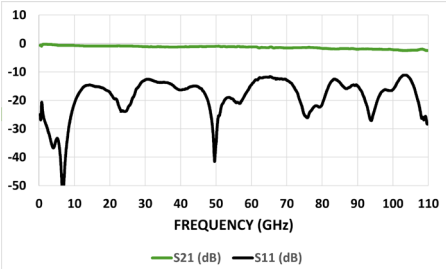

Typical HL9449 Insertion and Return Loss

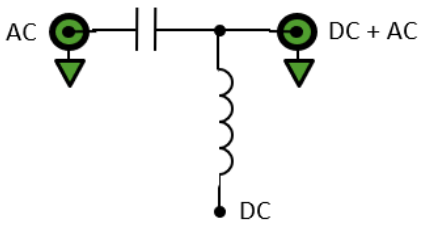

HL9449 Schematic and Port Assignments

HL9448 and HL9449 Full Specifications

Parameter	HL9448	HL9449	Comments
Upper Frequency Limit	> 95 GHz	> 110 GHz	3 dB roll-off point, relative to nominal insertion loss
Lower Frequency Limit See *Fig. 2*	160 kHz (opt. -11) 200 kHz (opt. -30)		3 dB roll-off point
Maximum Current	175 mA		
Breakdown Voltage	11 V, max (opt. -11) 30 V, max (opt. -30)		
Amplitude Match See *Fig. 5*	± 0.1 dB, f ≤110 GHz, all options		Typical, opt. -M
Phase Match	± 4°, f = 40 GHz (opt. -M)		Typical, opt. -M
Insertion Loss See *Fig. 1*	2.5 dB 160 kHz ≤ f ≤ 95 GHz	2.5 dB 160 kHz ≤ f ≤ 110 GHz	Typical
Return Loss See *Fig. 3*	15 dB, f ≤ 50 GHz 10 dB, 50 GHz < f ≤ 110 GHz		Typical, within specified operating frequency
Rise Time	3.7 ps	3.2 ps	Typical
Group Delay See *Fig. 4*	103 ps	105 ps	All options
Isolation *DC bias port to RF ports*	> 30 dB		Typical
Impedance	50 Ω		Input and Output
DC Resistance	2 Ω		DC to AC+DC
Connector Type	1.0 mm		AC and AC+DC ports
Connector Configurations (specify when ordering)	Port 1 (AC): jack (J) or plug (P) Port 2 (AC+DC): jack (J) or plug (P) Port 3 (DC): SMA jack (S) or capacitive feedthru pins (C) *Standard configuration is -JPS or -JPC*		E.g. config -JPS: AC jack, AC+DC plug, DC jack Or, config. -JJC: AC jack, AC+DC jack, DC pins
Dimensions (W x D x H)	1.95” x 1.30” x 0.53” 49.53 x 33.02 x 13.46 mm		Package including connectors
Weight	24 g (0.85 oz.)		
Operating Temperature	-40° to +70° C		Case temperature
RoHS Compliant	Yes, assembled with lead-free solder		
REACH Compliant	Yes		
Warranty	1 year, repair or replacement; see website for details		

NOTE - All specifications are based on test results using the standard connector configuration (-JP, jack/plug). Specifications may vary slightly for other configurations.

HL9449 Performance Characteristics

Figures 1-5 show the typical performance characteristics of the HL9449 opt. -11 from 10 MHz to 110 GHz, except Fig. 3 which shows low-frequency response to 100 Hz. Other models show similar performance within their specified bandwidth.

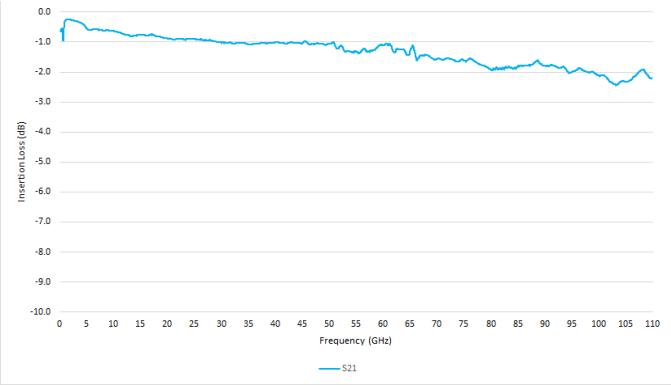

Fig. 1: Typical HL9449 Bandwidth and Insertion Loss

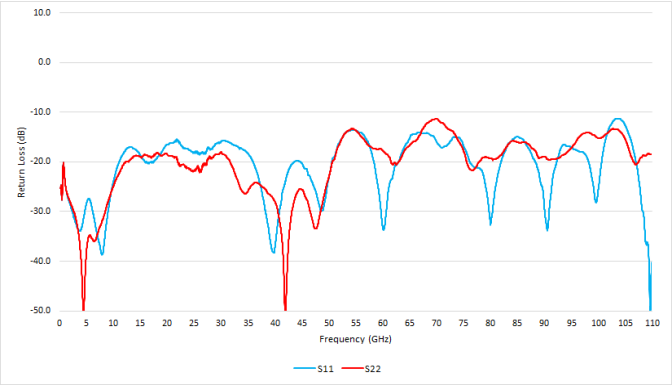

Fig. 2: Typical HL9449 Return Loss

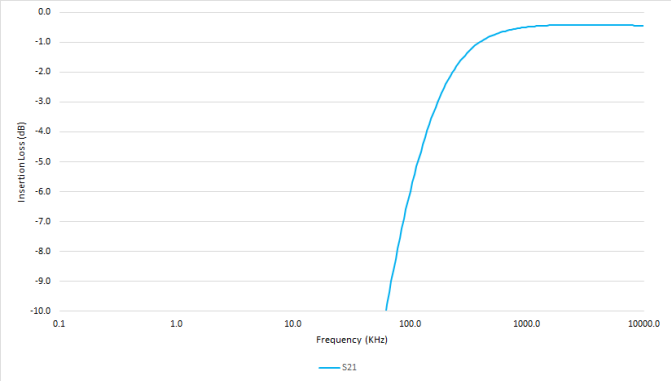

Fig. 3: Typical HL9449 Low Frequency Performance (opt. -30)

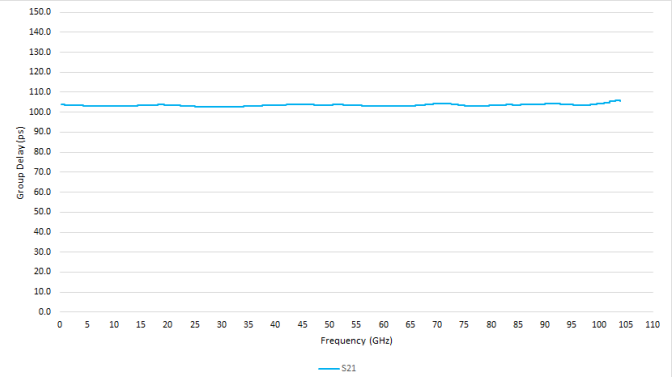

Fig. 4: Typical HL9449 Group Delay

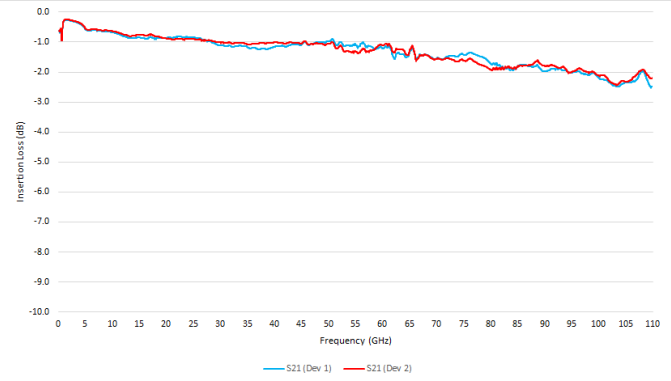

Fig. 5: Typical HL9449 Amplitude Matching (opt. -M)

HL9449 Dimensional Drawing

Figure 6 shows a mechanical drawing of an HL9449 (opt. -JJC) with pins for DC bias. *Figure 7* shows the HL9449 (opt. -JJS) with an SMA DC port. Unless otherwise noted, all units are in inches. See page 2 for full dimensions.

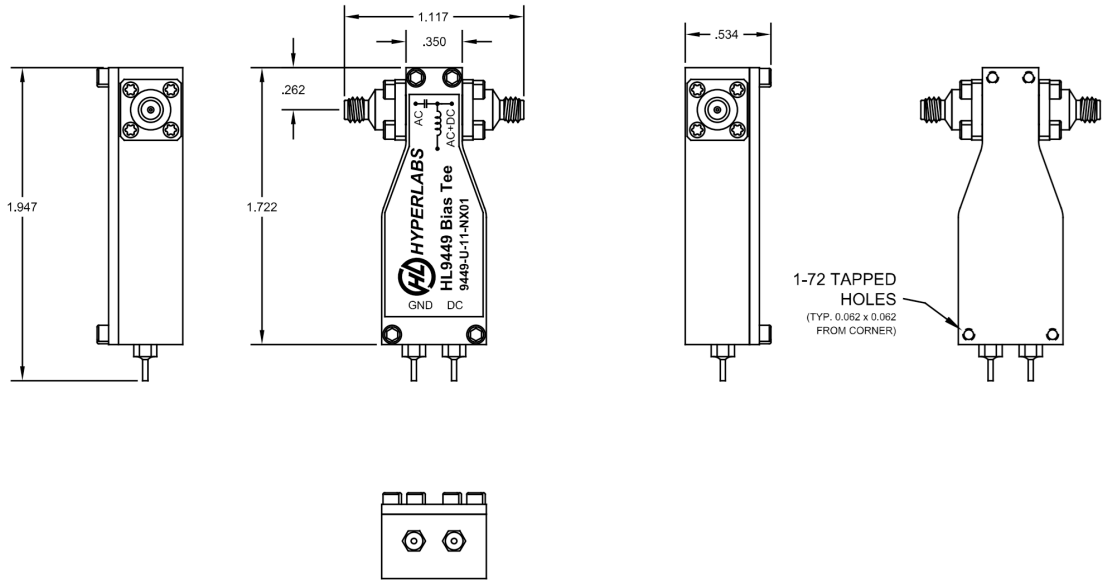

Fig 6: HL9449 with DC bias pins Mechanical Drawing

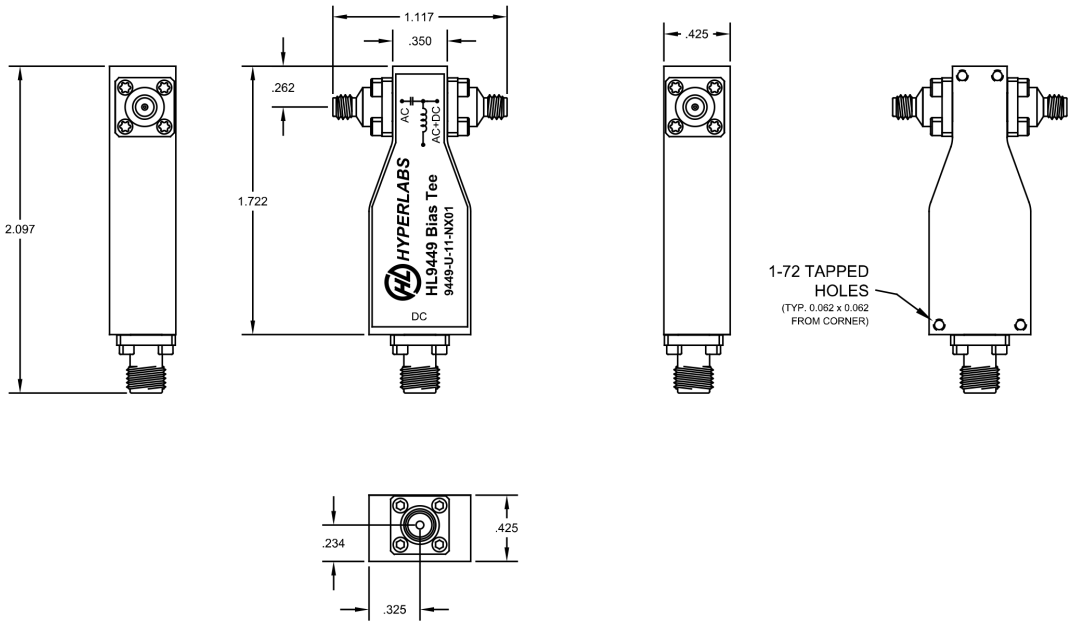

Fig 7: HL9449 with SMA DC bias port Mechanical Drawing